ROLAND ELECTRONIC

Double Sheet Detection System UDK20

Electro magnetic and eddy current principles – integrated in one sensor

THE ROLAND PLUS

- ▶ **Panel mount**
- ▶ **All common fieldbus technologies**

Single probe contact double sheet control of ferrous and non-ferrous materials.
Ferrous materials: no force after measurement, up to 4 mm (.16 in) sheet thickness.
Non-ferrous materials: for sheet thickness up to approx. 2 mm (.08 in) e.g. for customary automotive aluminium alloy up to 4 mm (.16 in), for stainless steel up to 2 mm (.08 in).

- Direct connection up to 2 sensors with one unit (version 2 PW) or via Sensor Switch Box up to 4 sensors
- Digital display of sheet thickness and operations parameter
- Programmable for 255 different sheet thicknesses
- Monitoring of over gauge and under gauge limits
- Monitoring of operating voltage and measuring time
- Opto coupled 9 respectively 11-Bit PLC input interface
- Selectable interfaces:
  - opto coupled RS232 interface
  - relay or opto coupled output for under gauge, nominal gauge, over gauge and enable
  - all common fieldbus technologies

DOUBLE SHEET CONTROL SYSTEM UDK20

Description

In the stamping plants of the automotive industry, steel is in an increasing number of cases substituted by aluminum and other non-ferrous materials. When loading blanks automatically into presses care must be taken to avoid feeding double blanks into the dies. Otherwise machines or dies may be damaged resulting in expensive repairs and loss of production. The Double Sheet Detector UDK 20 can reliably prevent such double sheet conditions by monitoring steel and aluminum blanks with only one sensor.

Either one or two sensors of the PW42AGS type can be directly connected to the UDK20, or up to four sensors can be connected via the Sensor Switch Box SSBUDK10. The sensors can be addressed either sequentially by the PLC or the new sequencer switching method (applies only to the two directly connected sensors). The sequencer function eliminates the time-consuming switching of the measuring channel or the program by the PLC. Double sheet detection of steel sheets with 1 mm thickness, 120 % double sheet threshold and two PW42AGS sensors requires in the sequencer mode only 115 milliseconds. In contrast, the same measurement with program switching by the PLC requires more than 370 ms.

Function:

The Double Sheet Detector UDK20 combines the electromagnetic and eddy current measurement principles. It monitors the sheet thickness from one side only and in the case of steel does exert forces only during measurement. A change of the sheet thickness causes a change of the inductance. The control unit calculates the sheet thickness resulting from this change. Based on the predetermined thresholds 0-sheet, 1-sheet, or 2-sheets of output signals are generated.

The control unit UDK20 is available in the versions to B, C and fieldbus with with varying capabilities (see technical data).
All control units are available with 255 parameter sets (thicknesses). The versions and their performance features are described in the equipment designation. Standard control units have a 24 V - parallel interface for the selection of the 255 parameter sets. In case of fieldbus control units the selection is is done via the fieldbus.

Technical data:

Operating voltage:	24 V DC +6 V / -2 V	
Power consumption:	60 W (Operation: <60 W, in idle: <10 W)	
Protection category:	IP 65	
Ambient temperature:	0 - 50 ° C	
Weight:	approx. 1.5 kg	
Signal inputs:	galvanically isolated 24 V DC with joint common	
	Version B-R:	Version B-O, C-O and Fieldbus:
Switching outputs:	Dry relay opening contacts	galvanically isolated with optocoupler
Max. switching voltage:	250 V AC	50 VAC
Max. switching current:	1 Amps	0.15 Amps
Max. switching power:	240 W / 200 V A	100 mW

Standard version:

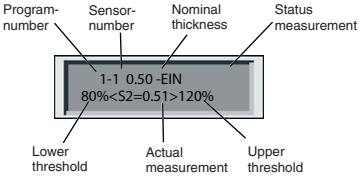

Fieldbus version:

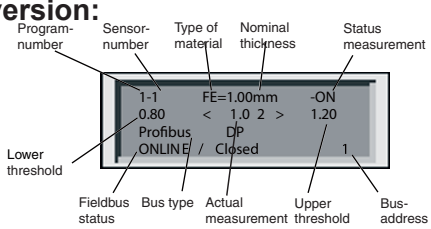

UDK20-xx-x-x-S-xx

Number of sensors:
-- : 1 sensor / SSB
up to 4 sensors
2PW : up to 2 sensors

Version:
B : Standard
C : Data backup via RS232

Outputs:
O : Optocoupler
R : Relais

Enclosure:
-- : Wall mount
FP : Panel mount

Example UDK20-C-O: for one sensor, data backup / remote control via RS232 with optocoupler signal output

UDK20-xx-xx-S-xx

Number of sensors:
-- : 1 sensor / SSB
up to 4 sensors
2PW : up to 2 sensors

Fieldbus:
PR : Profibus
xx : all commo
: fieldbusses

Enclosure:
-- : Wall mount
FP : Panel mount

Example UDK20-2PW-PR-S : for up to 2 sensors, data backup / remote control via fieldbus. These systems always have signal outputs with optocoupler and are completely equipped with connectors

Dimensions:

System UDK20

Width: 205 mm (8.07 in)
Height: 140 mm (5.51 in)
Depth: 80 mm (3.15 in)

System UDK20-2PW

Width: 205 mm (8.07 in)
Height: 140 mm (5.51 in)
Depth: 80 mm (3.15 in)

System UDK20-2PW-PR-S:

Width: 225 mm (8.85 in)
Height: 240 mm (9.44 in)
Depth: 80 mm (3.15 in)

DOUBLE SHEET CONTROL SYSTEM UDK20

Sensor:

Only the sensor PW42AGS is suitable for connection to the control unit UDK20. The connection of the older PW42GS sensorsis onlypossible to the older unit UDK10.

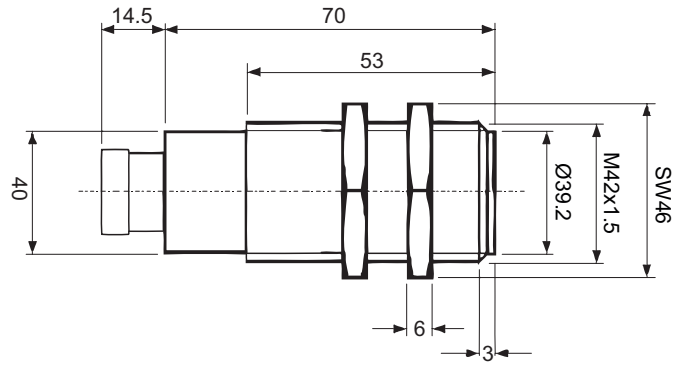

Spring loaded sensor bracket:

Spring loaded sensor bracket with vacuum cup SHS for sensor PW42AGS (also available without vacuum cup as type SH...GS).

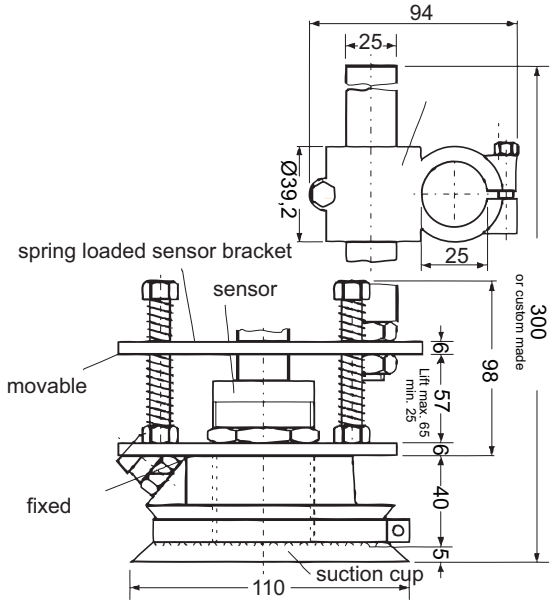

Measurement performance:

Ferrous materials (steel): 0.1 mm (.004 in.) to 4.0 mm (.160 in.) single sheet thickness
Non-ferrous materials: Bronze, zinc, aluminum (conductivity 1.3 - 38 millisiemens) up to 4 mm (.160 in.) single sheet thickness; copper alloy up to 3.5 mm (.137 in.); copper up to 3 mm (.12 in.), non-magnetic stainless steel (austenite) up to 2 mm (.08 in.)

Measurement time:

Ferrous materials (steel): In case of a maximum sheet thickness of 4 mm (.160 in.), 120 % double sheet threshold and one PW42AGS sensor, the detection time required is 80 milliseconds; a maximum of 160 milliseconds in the sequencer mode with two sensors (UDK20-2PW).
Non-ferrous materials: With one sensor or two sensors in the sequencer mode (system 2PW) constant 85 ms.

Air gap behaviour:

Ferrous materials (steel): The new Double Sheet Detector UDK20 has a much improved air gap tolerance especially in conjunction with the new sensor PW42AGS.
There are two types of air gaps in case of double sheet control. First there is the air gap between sensor and sheet surface (1st air gap) and the air gap between the first sheet and the second sheet (2nd air gap). The diagrams show the relationship.
Example for 1st air gap with sensor PW42AGS: According to the diagram, if processing a sheet of 2.0 mm (.08 in.) an air gap of 0.5 mm (.02 in) can be tolerated with a double sheet threshold of 120 %.
Example for 2nd air gap and sensor PW42AGS with 2.0 mm (.08 in.) sheet thickness and a double sheet threshold of 120 %; an air gap of up to 3.0 mm (.12 in.) can be tolerated.
Attention! The performance data of both diagrams cannot be combined!

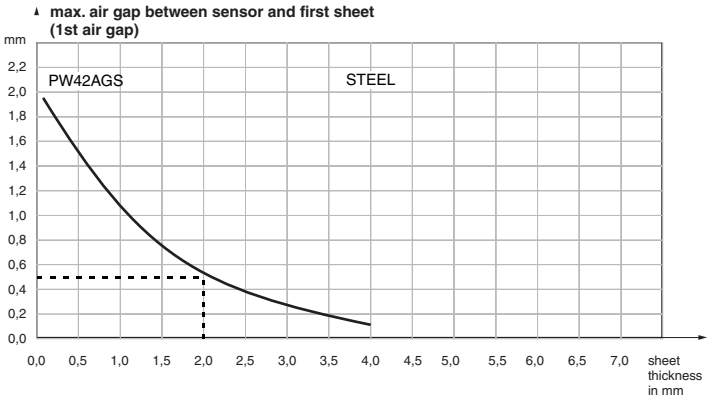

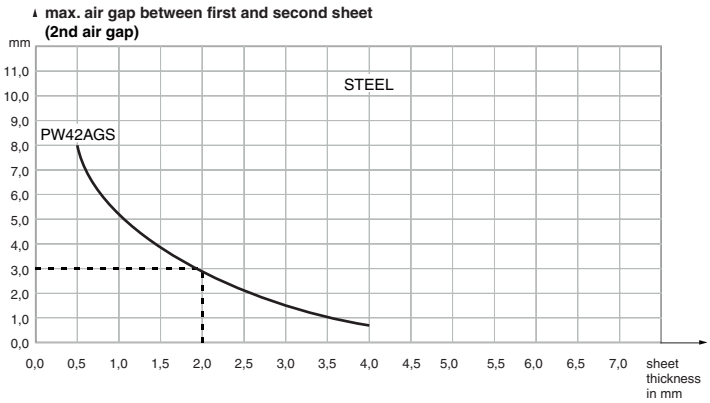

Non-ferrous materials: The air gap behavior is similar to ferrous material (steel).

DOUBLE SHEET CONTROL SYSTEM UDK20

Order data:

Control unit for the connection of one sensor or Sensor Switch Box SSBUDK10:

Part name	Comment	
UDK20-B-R-S	Control via PLC	Relay version
UDK20-B-O-S	Control via PLC	Optocoupler version
UDK20-C-O-S	Data backup, control via PLC	Optocoupler version
UDK20-PR-S*	Data backup, control via Profibus	

Control unit for the connection of up to 2 sensors (no Sensor Switch Box possible):

Part name	Comment	
UDK20-2PW-B-R-S	Control via PLC	Relay version
UDK20-2PW-B-O-S	Control via PLC	Optocoupler version
UDK20-2PW-C-O-S	Data backup, control via PLC	Optocoupler version
UDK20-2PW-PR-S*	Data backup, control via Profibus	
**all common fieldbus technologies are available*		

Sensor:

Part name	Comment
PW42AGS	Electromagnet with integrated eddy current probe up to 4.0 mm (.160 in.) single sheet thickness with ferrous and non-ferrous materials, except copper and copper alloys and stainless steel (austenite)

Cable:

Part name	Comment
SCPWS-GG	Straight receptacle, standard length 5 m
SCPWS-GW	Right angle receptacle, standard length 5 m
Cables up to 50 m, for longer cables enquire	

Connection cable between UDK20 and SSBUDK10:

Part name	Comment
SVCPWS-SSBUDK10	Sensor cable for connection via Sensor Switch Box SSBUDK10
Cables up to 25 m made to order, for longer cables enquire	

Sensor cable SCPWS-GG:

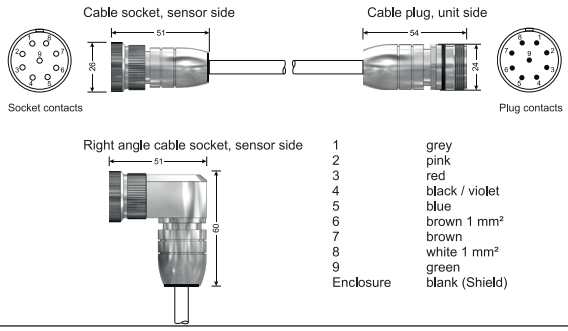

Special accesoires:

Part name	Comment
SSBUDK10	Sensor Switch Box for the connection of up to 4 sensors
SH42GS	Spring loaded sensor bracket for PW42AGS
SHS42GS	Spring loaded sensor bracket with vacuum cup for PW42AGS
SHS42G-FB	Spring loaded sensor bracket with bellow vacuum cup for PW42AGS
SHK	Clamping bracket
2395110	Rubber lips for vacuum suction cup
PWSE10	Program selection box, also suitable for UDK20
RPP	Software for parameter backup on a PC (Version C only)

ROLAND ELECTRONIC GMBH

Otto-Maurer-Strasse 17 75210 Keltern / Germany
Phone: +49(0)7236-9392-0 Fax: +49(0)7236-9392-33
info@roland-electronic.com www.roland-electronic.com

Revision 1.4, November 2016 - Subject to technical modification and error